SWING CHECK VALVE
(FOR FIRE PROTECTION)

HD FIRE PROTECT PVT. LTD.

TECHNICAL DATA

SIZES	2" (50NB), 2.5" (65NB), 3" (80NB), 4" (100NB), 6" (150NB), 8" (200NB), 10" (250NB), 12" (300NB)
MAXIMUM WORKING PRESSURE.	300 psi (21 kg/sq.cm)
TEMPERATURE RATING	0 - 100°C
BODY	Ductile iron conforming to ASTM A-536,Grade 65-45-12
DISC	DN50-100: AISI 304 DN150-300: ASTM A536, 65-45-12
FLANGE CONNECTION	ANSI B16.1#125 (Drilling as per ANSI B16.5/ ANSI B16.42)
COATING	Fusion Bond Epoxy Coating (RAL 3000)
APPROVALS	UL Listed & FM Approved
MODEL	As per Table-I

DESCRIPTION

HD Swing Check Valves are rubber faced check valves approved for use in fire protection systems. These are rated for maximum working pressure of 300 PSI. These are of perfect use in building riser pipes, sprinkler systems, and various fire protection systems.

These valves are suitable for horizontal as well as vertical installations. The valves are provided with access cover (flange type) and plug (grooved type) for maintenance and drain purpose. Direction of water flow is marked on the valves.

TABLE-I

Model	Description
SCV-300	Flanged Swing Check Valve
SCV-250	
SCV-200	
SCV-300G	Grooved Swing Check Valve
SCV-250G	
SCV-200G	
SCV-PN16G	
SCV-PN10G	

NOTE

Optional items must be clearly mentioned in your inquiry and purchase order for clarity. If optional items are not mentioned, standard supply will be assumed.

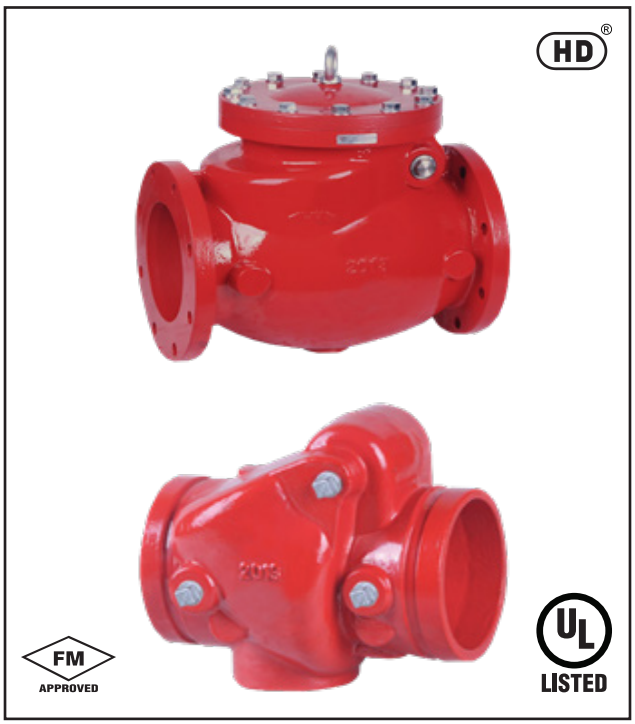

INSTALLATION

HD Swing Check Valve can be installed vertically or horizontally with flow direction as marked on the valve. The Swing Check Valve must be installed in an area not subject to physical damage. When corrosive atmospheres and/or contaminated water supplies are present, it is the owner's responsibility to verify compatibility with the Swing Check Valve and associated equipment. Prior to installing the valve, thoroughly flush the water supply piping to verify that no foreign matter is present. The Swing Check Valve may be installed in vertical position with direction of flow up, or in horizontal position with the access cover up. HD Swing Check Valve flanges are Ductile Iron ANSI B16.42, Class 125, with a maximum water working pressure of 300 psi (20.7 bar). ANSI B16.42, Class 125 flanges are not compatible with ANSI Class 250 or Class 300 flanges.

HD Swing Check Valves described herein must be installed and maintained in compliance with this document and with applicable standards of National Fire Protection Association (NFPA), in addition to the standards of any authorities having jurisdiction. Failure to do so may impair the performance of these devices.

Valves installed vertically must be positioned with flow in the upward direction. Valves should be installed at reasonable distance downstream from pumps, elbows, reducers, or other similar devices to extend the valve life. Standard piping practice requires a minimum of five (5) times the pipe diameter for general use installation.

SWING CHECK VALVE WITH FLANGE ENDS

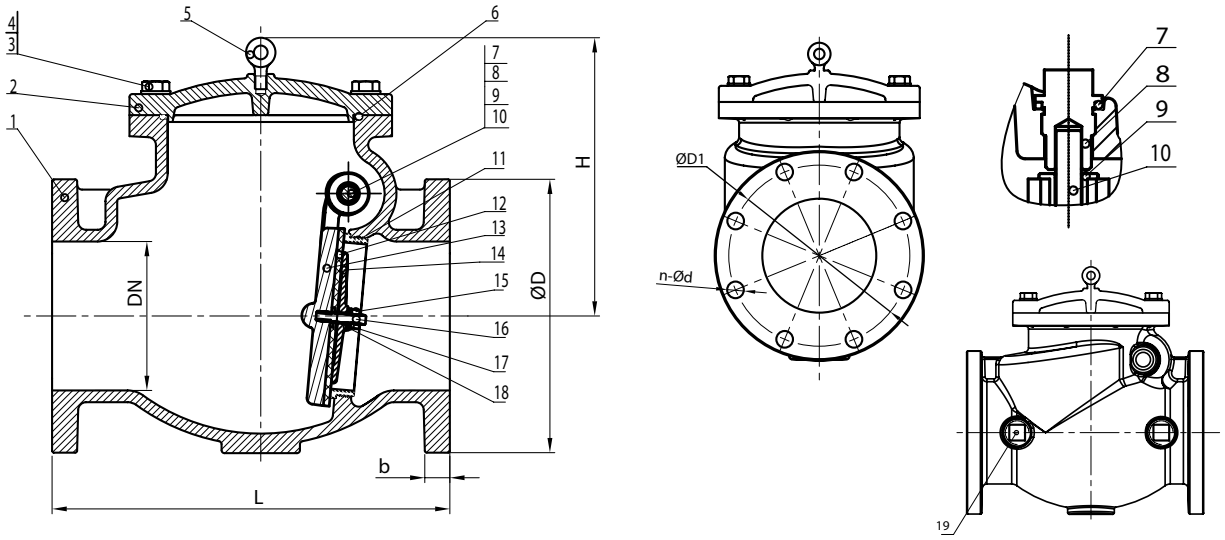

Part No.	Part	Material
1	Valve Body	Ductile Iron, 65-45-12
2	Bonnet	Ductile Iron, 65-45-12
3	Bolts	Carbon Steel Zinc Plated
4	Washer	Carbon Steel Zinc Plated
5	Eye Bolt	Carbon Steel Zinc Plated
6	O-Ring	NBR
7	Washer	PTFE
8	Plug	Stainless Steel 304
9	Hinge Bushing	Brass ASTM B16 C36000
10	Hinge Pin	Stainless Steel 410
11	Seat Ring	Bronze ASTM B62
12	Seal	EPDM
13	Disc	Ductile Iron, 65-45-12
14	Plate	Ductile Iron, 65-45-12
15	Nut	Stainless Steel 304
16	Bolt	Stainless Steel 304
17	Spring Washer	Stainless Steel 304
18	Flat Washer	Stainless Steel 304
19	Plug	Malleable Iron Galvanized

Size		Dimensions (mm)					
Inch	mm	L	D	D1	b	n-Ød	H
2”	50	203	152	120.5	16	4-Ø19.1	133
2.5”	65	254	178	139.5	17.5	4-Ø19.1	150
3”	80	278	191	152.5	19	4-Ø19.1	150
4”	100	330	229	190.5	24	8-Ø19.1	218
6”	150	406	279	241.5	25.5	8-Ø22.2	290
8”	200	495	343	298.5	28.5	8-Ø22.2	330
10”	250	622	406	362	30.5	12-Ø25.4	350
12”	300	660	483	432	32	12-Ø25.4	376

SWING CHECK VALVE WITH GROOVED ENDS

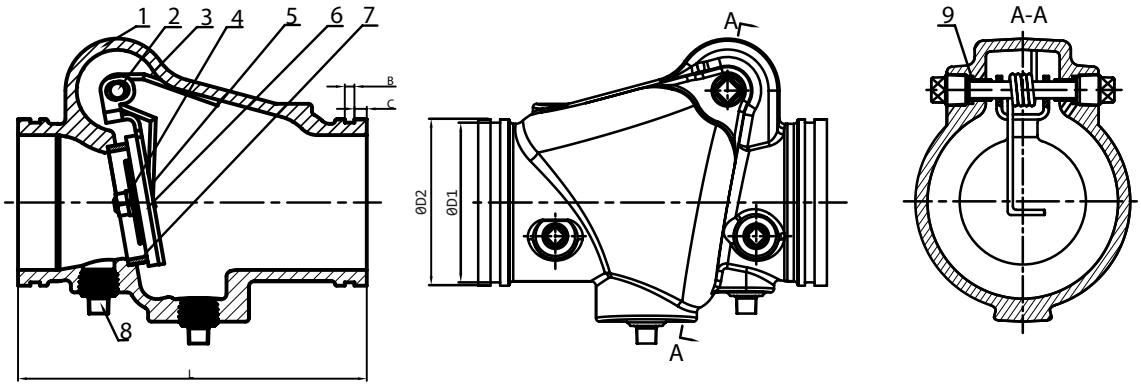

Part No.	Part	Material
1	Valve Body	Ductile Iron 65-45-12
2	Hinge Pin	Stainless Steel 420
3	Spring	Stainless Steel 304
4	Spring Washer	Stainless Steel 304
5	Disc	Ductile Iron 65-45-12 or Stainless Steel 304
6	Seal Ring	EPDM
7	Seat	ASTM B62
8	Plug	Malleable Iron Galvanized
9	Bushing	ASTM B62

Size		L (mm)	Ø D1(mm)	Ø D2(mm)	B(mm)	C(mm)9
In	mm					
2”	60	171 ±1	$57.15^{0}_{-0.38}$	$60.3^{+0.61}_{0}$	$7.93^{+0.79}_{0}$	15.88 ±0.79
2.5”	73	184 ±1	$69.09^{0}_{-0.46}$	$73^{+0.74}_{0}$	$7.93^{+0.79}_{0}$	15.88 ±0.79
3”	89	197 ±1	$84.94^{0}_{-0.46}$	$88.9^{+0.89}_{-0.79}$	$7.93^{+0.79}_{0}$	15.88 ±0.79
4”	114	206 ±1	$110.08^{0}_{-0.51}$	$114.3^{+1.14}_{-0.79}$	$9.53^{+0.79}_{0}$	15.88 ±0.79
5”	141	247.65 ±1	$137.03^{0}_{-0.56}$	$141.3^{+1.42}_{-0.79}$	$9.53^{+0.79}_{0}$	15.88 ±0.79
6”	168	324 ±1	$163.96^{0}_{-0.56}$	$168.3^{+1.57}_{-0.79}$	$9.53^{+0.79}_{0}$	15.88 ±0.79
8”	219	370.84 ±1.5	$214.4^{0}_{-0.64}$	$219.1^{+1.57}_{-0.79}$	$11.13^{+0.79}_{0}$	19.05 ±0.79
10”	273	457.2 ±1.5	$268.28^{0}_{-0.69}$	$273^{+1.57}_{-0.79}$	$12.7^{+0.79}_{0}$	19.05 ±0.79
12”	324	534.9 ±1.5	$318.29^{0}_{-0.76}$	$323.9^{+1.57}_{-0.79}$	$12.7^{+0.79}_{0}$	19.05 ±0.79

NOMINAL PRESSURE LOSS VS FLOW

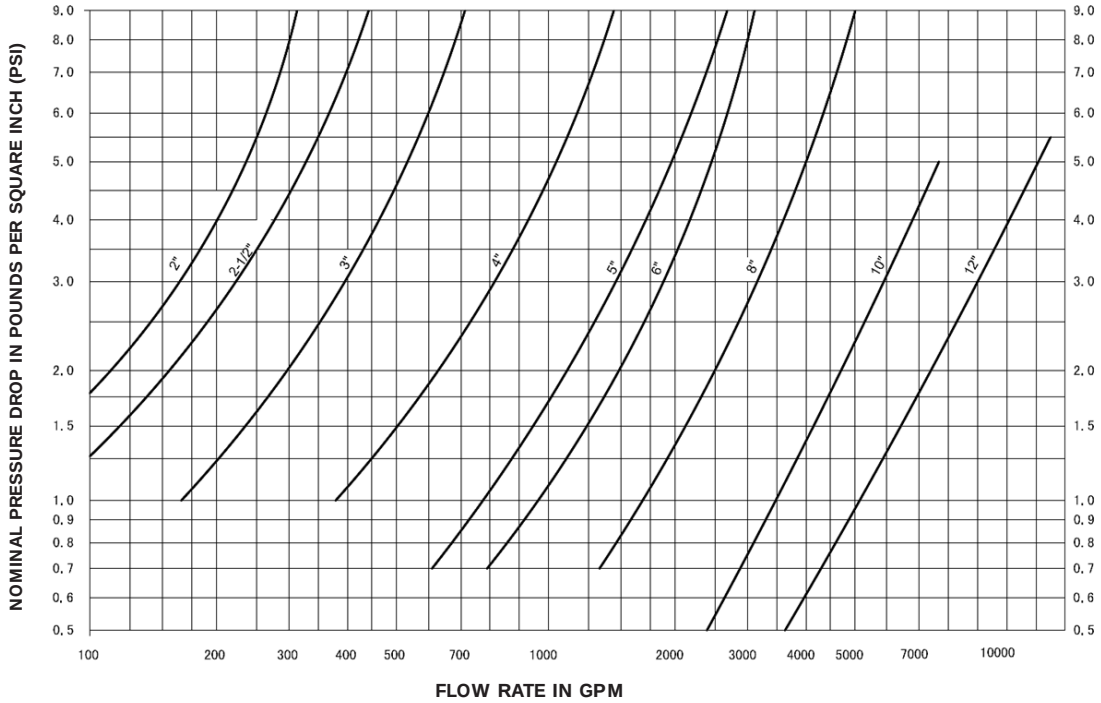

MAINTENANCE

Inspect and verify proper operation on semi-annual basis or according to the requirements of NFPA or Authority Having Jurisdiction (AHJ). Installation, inspection and maintenance should be performed by a qualified person(s), certified by the Authority Having Jurisdiction. In case of any issue, please ensure that there is no debris clogged in the waterway around the seat area of the valve.

Swing Check Valves must be inspected, tested and maintained as instructed above, in addition to the requirement of NFPA or as per requirement of authority having jurisdiction. The owner is responsible for the inspection, testing and maintenance of the system.

LIMITED WARRANTY

HD FIRE PROTECT PVT. LTD. hereby referred to as HD FIRE warrants to the original purchaser of the fire protection products manufactured by HD FIRE and to any other person to whom such equipment is transferred, that such products will be free from defect in material and workmanship under normal use and care, for two (2) years from the date of shipment by HD FIRE. Products or Components supplied or used by HD FIRE, but manufactured by others, are warranted only to the extent of the manufacturer's warranty. No warranty is given for product or components which have been subject to misuse, improper installation, corrosion, unauthorized repair, alteration or un-maintained. HD FIRE shall not be responsible for system design errors or improper installation or inaccurate or incomplete information supplied by buyer or buyer's representatives. HD FIRE will repair or replace defective material free of charge, which is returned to our factory, transportation charge prepaid, provided after our inspection the material is found to have been defective at the time of initial shipment from our works. HD FIRE shall not be liable for any incidental or consequential loss, damage or expense arising directly or indirectly from the use of the product including damages for injury to person, damages to property and penalties resulting from any products and components manufactured by HD FIRE. HD FIRE shall not be liable for any damages or labour charges or expense in making repair or adjustment to the product. HD FIRE shall not be liable for any damages or charges sustained in the adaptation or use of its engineering data & services. In no event shall HD Fire's product liability exceed an amount equal to the sale price. The foregoing warranty is exclusive and in lieu of all other warranties and representation whether expressed, implied, oral or written, including but not limited to, any implied warranties or merchantability or fitness for a particular purpose. All such other warranties and representations are hereby cancelled.

NOTICE :

The equipment presented in this bulletin is to be installed in accordance with the latest publication standards of NFPA or other similar organisations and also with the provision of government codes or ordinances wherever applicable.

The information provided by us is to the best of our knowledge and belief, and consist of general guidelines only. Site handling and installation control is not in our scope. Hence we give no guarantee for result and take no liability for damages, loss or penalties whatsoever, resulting from our suggestion, information, recommendation or damages due to our product.

Product development is a continuous programme of HD FIRE PROTECT PVT. LTD. and hence the right to modify any specification without prior notice is reserved with the company.

HD FIRE PROTECT PVT. LTD.
Protecting What Matters Most to You

D-6/2, ROAD NO. 34, WAGLE INDUSTRIAL ESTATE, THANE 400 604, INDIA.
• TEL: + (91) 22 2158 2600 • FAX: +(91) 22 2158 2602
• EMAIL: info@hdfire.com • WEB: www.hdfire.com